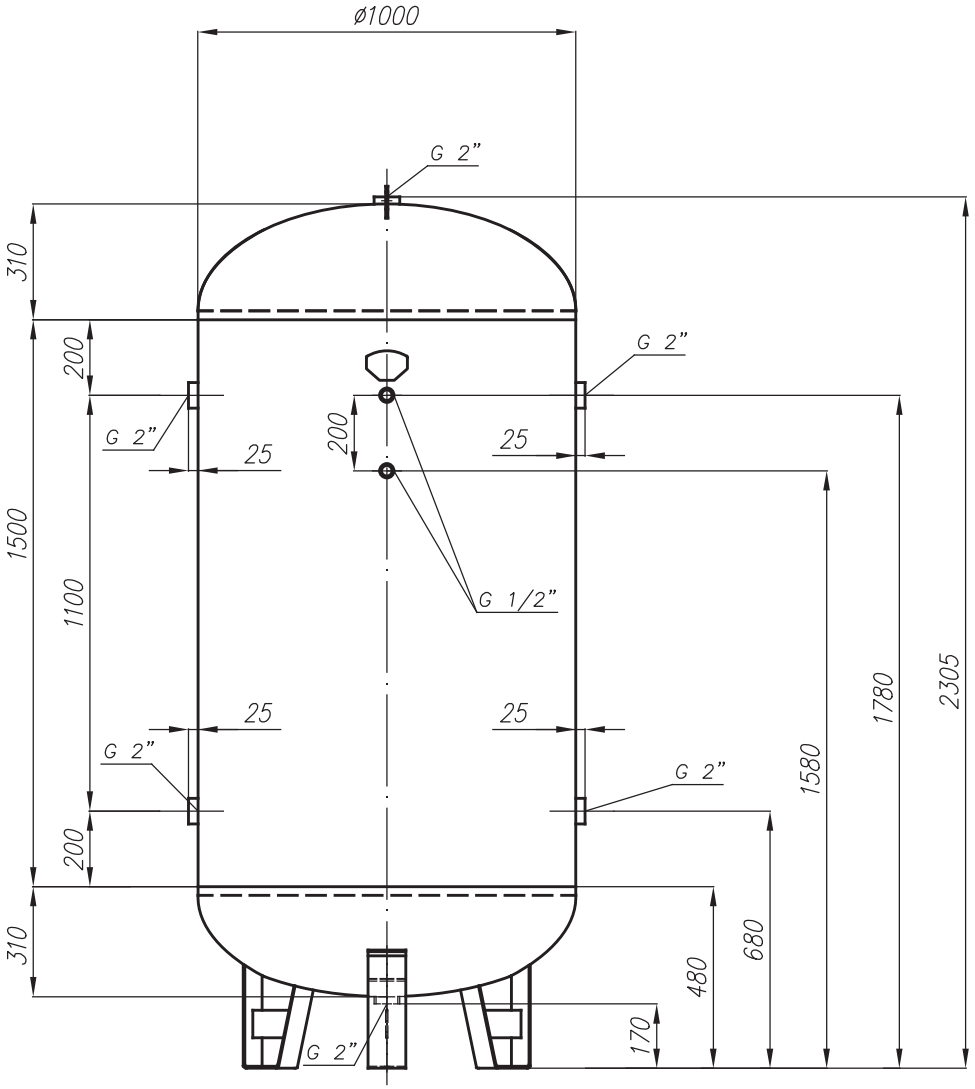

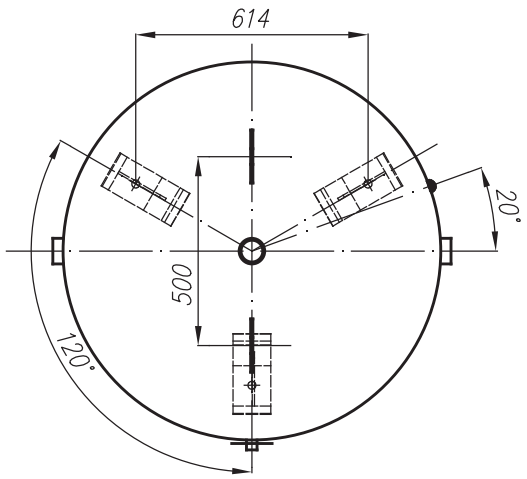

AIRPRESS | compressoren	LT 1500 PD 12 BAR – STANDARD –	SKU 36113, 36198